Dimamotor

An efficient drive comes from an efficient motor

Servo motor/step motor exclusive precision planetary reducer

PH42-□ SERIES

Features

- Planetary structure with doubled rigidity.
- Wear resistant matrix with hardness at 25HRC.
- Full range of ratio.

Specification		Unit	PH42-3	PH42-4	PH42-5	PH42-7	PH42-10
Number of stage			Single stage				
Gear Ratio			3	4	5	7	10
Nominal output torque	Tn	Nm	14	12	14	12	9
Torque maximum output	Tp	Nm	2.5 times of the nominal output torque				
Nominal input speed	Nn	rpm	3000				
Maximum input speed	Np	rpm	6000				
Backlash		arcmin	General				
Torsional stiffness		Nm/arcmin	10				
Radial load at the output shaft	Fr	N	820				
Axial load at the output shaft	Fa	N	410				
Efficiency	η	%	95				
Running noise (n=3000rpm)		db	＜57				
Operating temperature		℃	-10～+90				
Weight		Kg	0.9 +/- 0.05				
Installation direction			Any direction				

Specification		Unit	PH42-15	PH42-20	PH42-25	PH42-30	PH42-50	PH42-100
Number of stage			Dual stage					
Gear Ratio			15	20	25	30	50	100
Nominal output torque	Tn	Nm	14	12	14	14	14	9
Torque maximum output	Tp	Nm	2.5 times of the nominal output torque					
Nominal input speed	Nn	rpm	3000					
Maximum input speed	Np	rpm	6000					
Backlash		arcmin	General					
Torsional stiffness		Nm/arcmin	10					
Radial load at the output shaft	Fr	N	820					
Axial load at the output shaft	Fa	N	410					
Efficiency	η	%	90					
Running noise (n=3000rpm)		db	＜57					
Operating temperature		℃	-10～+90					
Weight		Kg	1.5 +/- 0.05					
Installation direction			Any direction					

Dimension diagram (mm)

(A) Single stage reducer

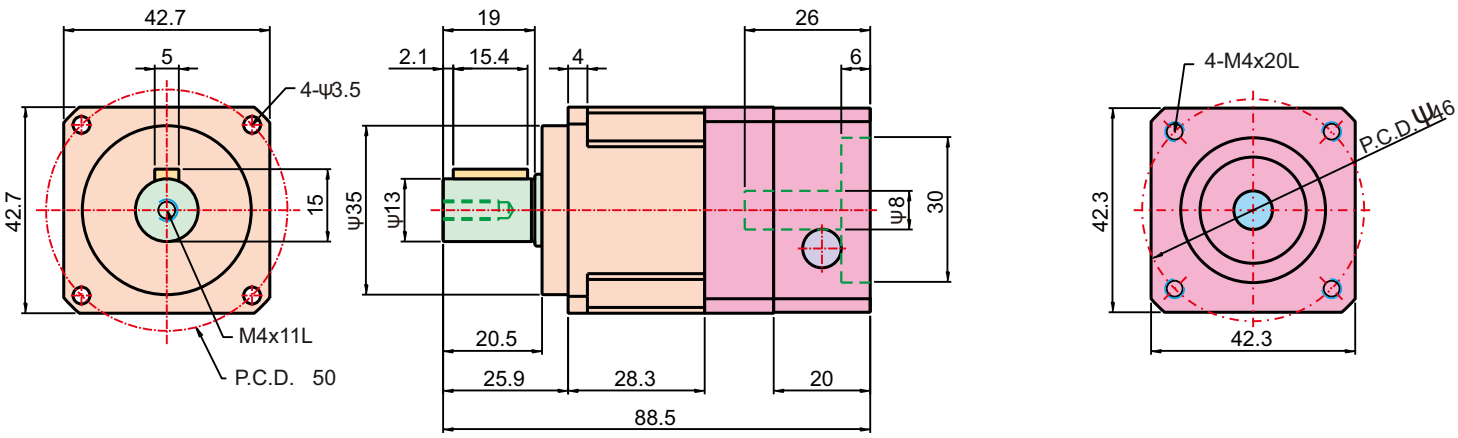

(B) Dual stage reducer

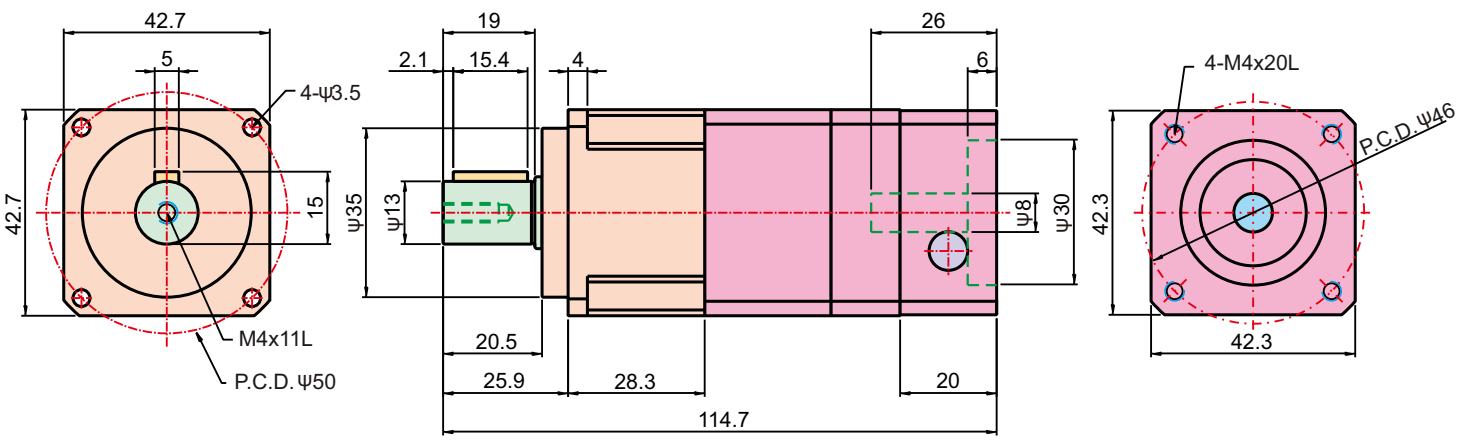

Dimamotor
An efficient drive comes from an efficient motor

Dima Motor Tech. Co., Ltd.

Head office: 5F-11, No. 22, Wuquan 2nd Road , Xinzhuang Dist, New Taipei City
Tel: (02) 2290-1968
Fax: (02) 2290-1969
Web: www.dimamotor.com.tw
E-mail: dimamotor.sales@gmail.com